ASPEN SERIES

CONFIGURABLE DIRECT / INDIRECT LINEAR PENDANT

Aspen pairs an extruded-aluminum housing with glare-free, non-yellowing acrylic for direct and indirect illumination. Standard selections are shown below; custom finishes, color temperatures, lumen outputs, RGBW and tunable white are available.

LINEAR DIFFUSER



Three 39.37 in linear bars

DIRECT / INDIRECT LIGHT

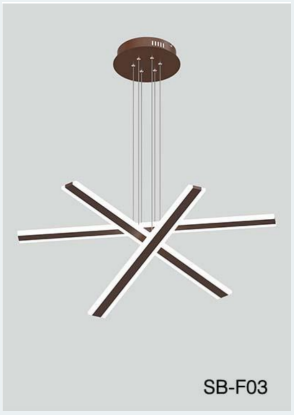

Ships assembled

SUSPENSION DETAIL

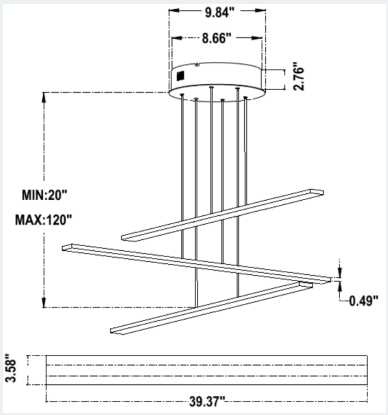

Aircraft cable suspension

KEY FEATURES

- 60W standard fixture; three 39.37 in linear bars.
- Direct and indirect illumination with glare-free, non-yellowing acrylic.
- 5,205 lm listed output; 85 lm/W stated efficacy. See source clarifications on page 3.
- Four standard finishes plus more than 6,500 finishes and colors; paint sample / RAL matching.
- CRI 90+; selectable 3000K / 3500K / 4000K; factory default 4000K.
- 100-277V, 50/60Hz; 1-10V standard; ELV / TRIAC, DMX and ZigBee options.
- 10 ft aircraft cable standard; 5, 15, 20 and 25 ft cable options.
- RGBW, tunable white, custom CCT and lumen outputs available.

SPECIFICATIONS

LINEAR PROFILE

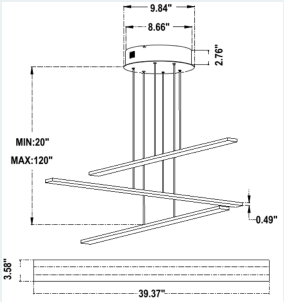

ELECTRICAL

100-277V, 50/60Hz

1-10V dimming standard

UL listed; dry location

5-year limited warranty

FINISH & CONFIGURATION

Custom colors / RAL matching

RGBW and tunable white

Ships assembled

22.0 lb fixture weight

BUILD MODEL NUMBER

SELECT STANDARD MODEL + CONTROL / COLOR OPTIONS

Project	Fixture Type	Qty

ORDER SELECTION / COMPLETE EACH FIELD

1 MODEL NUMBER	2 CONTROLS	3 RGBW / CCT	4 FINISH	5 SUSPENSION	6 EMERGENCY

1 MODEL NUMBER - STANDARD LINEAR PENDANT

PUBLISHED EXAMPLE: SB-F03-60WSB

SB-F03	60W / 39.37 IN x 3

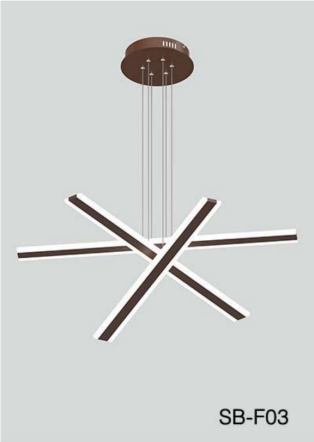

SB-F03 / 60W

3 x 39.37 in bars | 60W total

5,205 lm listed output | 22.0 lb

3000K / 3500K / 4000K selectable

4000K factory default

Example SB-F03-60WSB: standard selectable CCT / 1-10V, Black Jack.

CUSTOM CONFIGURATION

Custom color temperatures and lumen outputs

RGBW and 3000K-4000K tunable white

Custom finish / paint sample / RAL color matching

Standard configuration: three 39.37 in bars; 60W total connected load.

CONSULT FACTORY FOR CUSTOM MODEL NUMBER

1 MODEL NUMBER - CONTINUED

DIMENSIONS / INSTALLATION / SOURCE CLARIFICATIONS

Source sheet identification: SB-F03-60WSZ. Confirm the complete ordering suffix with the factory.

DIMENSIONS & WEIGHT

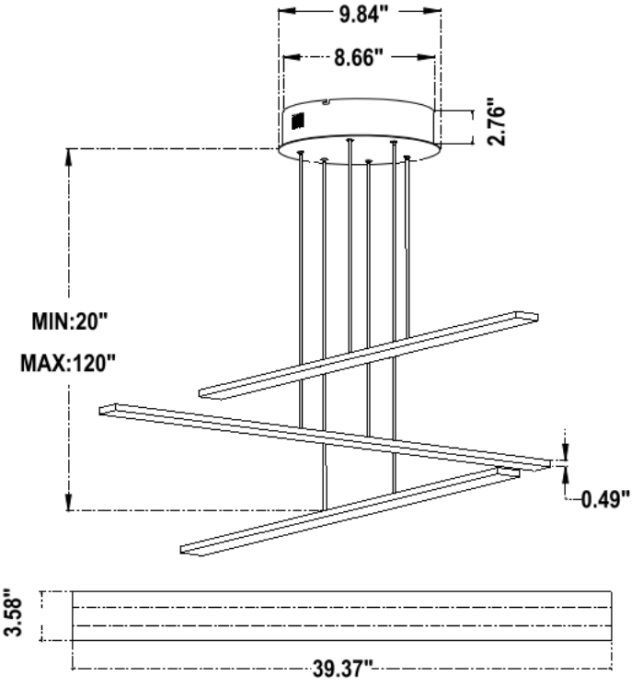

INSTALLATION DETAILS

Each linear bar: 39.37 in L x 3.58 in W

Profile height: 0.49 in

Weight: 22.0 lb

Standard canopy drawing:
9.84 in outside diameter; 8.66 in inner dimension; 2.76 in height.

Suspension drawing:
20 in minimum / 120 in maximum.

ZigBee / DMX canopy:
15.75 in x 2.76 in, as stated in source.

STANDARD FIXTURE CONTENTS

Plastic anchors

Screws

Wire connectors

CCT selector switch

Fixture ships assembled.

SOURCE CLARIFICATIONS

The source lists 5,205 lm and 85 lm/W at 60W; those figures do not exactly reconcile.

The supplied photometric page is labeled SB-F01-20WSZ, 20W, and tests one linear light only. It is not a full-fixture SB-F03 test.

The SB-F03-60WSZ title differs from the published SB-F03-60WSB ordering example. No suffix has been inferred.

Confirm these items with the factory.

ORDERING OPTIONS

STANDARD SELECTIONS + PROJECT-SPECIFIC CUSTOMIZATION

Complete each model-number field below. Where a standard selection does not meet the project intent, specify CUSTOM and consult the factory.

2 CCT

S	Selectable 3000K / 3500K / 4000K
A	Selectable 2700K / 3500K / 4000K

3 DIMMING / DALI

BLANK	0-10V dimming - standard
L	ELV / TRIAC dimming
C	DALI

4 FINISH

B	Black Jack
S	Platinum Silver
W	Gloss White
O	Oil Rubbed Bronze
X	Custom finish / color

VIEW CUSTOM FINISHES & COLORS

5 SUSPENSION

BLANK	10 ft adjustable cable - standard
5/15	5 ft / 15 ft cable
20/25	20 ft / 25 ft cable
30	30 ft cable
X	Custom cable length / canopy

6 EMERGENCY BATTERY OPTIONS

SEE SPEC



MODEL NUMBER	DESCRIPTION
SB-EBP/5W/B	Factory installed remote emergency battery pack, 5W, 90 minutes
SB-EBP/10.7W/B	Factory installed remote emergency battery pack, 10.7W, 90 minutes
SB-EBP/17W/B	Factory installed remote emergency battery pack, 17W, 90 minutes

EXPLORE RELATED LINEAR PRODUCTS

CUSTOM PROJECT ADVANTAGE

Custom bar length, bar count, configuration, finish color, suspension length, canopy and coordinating wall-mount options are available.

REQUEST A CUSTOM SOLUTION ONLINE

FINISH OPTIONS

Discover beyond our standard hues with over 6,500 finishes and colors available for your luminaire, including precise color matching, NFL team colors, and custom RAL finishes. Elevate your design with metallic, sparkle, or transparent textures for a touch of individuality Explore our most popular selection below and contact our factory for personalized quotes.

Request color swatches: customerservice@snowball-inc.com

Please note: Colors may appear differently due to screen display settings.

VIEW WEBSITE FINISH & COLOR OPTIONS



SOLID TONE FINISH

PMB-4364 Pearl White	**PMB-0593** Soft White	**PSB-8051** Dirty White	**PMB-0513** Silver Metallic II	**PMB-6525** BMW Silver	**HSS-1336** Silk Satin Black
PSS-0106 Ink Black	**USS-2603** Gloss Black	**UMB-0336** Metallic Bronze	**UMB-0493** US Bronze	**EMS-0940** Spanish Gold	**PMB-1808** Performance Gold
PSS-4971 Very Red	**PSS-2876** Orange Glow	**PSS-1791** JuJu Orange	**PSS-0118** Spring Yellow	**PSB-5945** Bright Green	**PMB-10657** Yama Blue
PPB-2846 Purple Glaze	**PSS-1670** Rosette Pink	**PSS-4008** Jewel Grey	**PSS-4500** Crest Grey	**PSS-4647** Beach Tan	**PMB-5478** Montana Gold

SHIMMER / GLITTER FINISH

PMB-5567 Champagne Shimmer	**UMB-2062** Shimmer Gold	**PMS-5677** Shimmer Copper	**PMB-6611** Shimmer Black	**PPB-8167** Transparent Glitter Gold	**PMB-6762** Alloy Glitter

PALLEON METALLIC TEXTURED FINISH

PVB-10274 Palleon Paradise	**PVB-10272** Palleon Fire	**PVB-10271** Palleon Golden Green	**PVB-10270** Dark Palleon Paradise	**PVB-10267** Dark Palleon Golden Green	**PVB-10268** Dark Palleon Fire
PVB-10273 Palleon Panther	**PVB-10269** Dark Palleon Panther				

CHROME / SPECIALTY FINISH

UMS-10671 Super Chrome Plus	**PPB-6677** Black Chrome III	**PMB-4124** Bronze Chrome	**UMB-10813** Rose Chrome	**UMB-10815** Brass Chrome	**UMB-10816** Copper Chrome
PPS-6530 Brassy Gold	**PPB-2262** Anodized Gold	**PPB-8034** Melted Bronze	**PPB-6325** Metallic Clear	**PPB-5633** Tinted Clear	**PPB-5936** Anodized Red

SPARKLE FINISH

PPB-4694 Super Red Sparkle	**PPB-4727** Silver Sparkle	**PPB-5835** Rockstar Sparkle	**PMB-4130** Pearl Sparkle	**PPB-5004** Ultra Blue Sparkle	**PPB-5078** Magnum Blue Sparkle
PMB-2750 Dark Grey Sparkle	**PMB-6769** Deep Blue Sparkle	**PPB-4499** Gold Sparkle	**PMB-4117** Baby Blue Sparkle		

WETSTONE WRINKLED TEXTURE FINISH

PWS-2232 Wetstone Black	**PWB-9157** Wetstone Gold Bronze	**PWB-9156** Wetstone Copper	**PWB-2343** Wetstone Rock Bronze	**PWB-2590** Wetstone Emerald II

PHOTOMETRIC

PUBLISHED TEST FOR ONE LINEAR LIGHT ONLY

SOURCE TEST: SB-F01-20WSZ | 40 IN | 20W | 4000K

