



SB-XP-415A

Breckenridge-D-4

PRODUCT DESCRIPTION

Breckenridge Natural Spanish Alabaster Pendant

Elegant and sculptural, this alabaster cluster pendant features multiple hand-carved alabaster globes arranged in a soft, cloud-like formation. Each globe highlights the natural veining and translucency of authentic alabaster stone, creating a warm, diffused glow when illuminated. Perfect for dining areas, living rooms, or boutique hospitality spaces, it offers both statement-making presence and serene ambient lighting.

FEATURES

- Each Alabaster head Size Diameter: 4.7” and 5.9”.
- Natural Spanish Alabaster.
- Metal finishes: Aged Brass, Black Jack, Platinum Silver, Gloss White.
- 15 Globes G9 15 (Max 3W each bulb, not included).
- 7.87” standard chain, custom length available.
- IP 20 indoor use.
- Input: 110-120V.
- All internal wiring and electrical components will be UL-recognized.
- More 50 lbs must be installed using a U.L. listed outlet box or supported independently of the outlet box.

MODIFICATIONS: CONSULT THE FACTORY FOR ALL MODIFICATIONS REQUESTS INCLUDING

- Different layouts, configurations.
- Different sizes, different quantity options for the lights
- Different metal finishes.
- Different mounting options.
- Integrated LED and Controls.
- Color temperatures. lumen outputs, RGBW, Tunable White available.

Breckenridge Collection



Ceiling lights



Drop Pendant



Linear Pendant



Wall Sconce



Flush Mount

MODEL INFORMATION:

Example: SB-XP-415A4AA

Products Series	Size/Number of bulbs	"A" Canopy Finishes	"B" Metal cable connector Finishes	"X" Adjustable Aircraft Cable Length
*SB-XP-415A	*4=4.7" each globe size 15 G4 bulb base	* A=Aged Brass	* A=Aged Brass	*Blank= 0.65 foot 7.87" (default)
		B=Black Jack	B=Black Jack	
	5=5.9" each globe size 15 G4 bulb base	S=Platinum Silver	S=Platinum Silver	
		W=Gloss White	W=Gloss White	

METAL STANDARD COLOR FINISHES

PSS-5690
Gloss White

PMB-8173
Platinum Silver



USS-1522
Black Jack



PPB-10674
Aged Brass



DIMENSIONS & WEIGHTS:

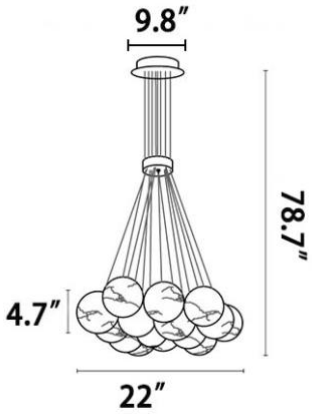

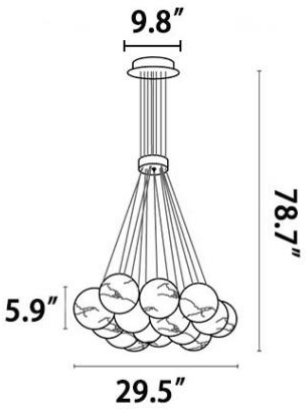





Discover beyond our standard hues with over 6,500 finishes and colors available for your luminaire, including precise color matching, NFL team colors, and custom RAL finishes. Elevate your design with metallic, sparkle, or transparent textures for a touch of individuality. Explore our most popular selections below and contact our factory for personalized quotes.

You can request color swatches by emailing us at customerservice@snowball-inc.com

Please note: Colors may appear differently due to screen display settings.



SOLID TONE FINISH

PMB-4364 Pearl White	**PMB-0593** Soft White	**PSB-8051** Dirty White	**PMB-0513** Silver Metallic II	**PMB-6525** BMW Silver	**HSS-1336** Silk Satin Black
PPS-0106 Ink Black	**USS-2603** Gloss Black	**UMB-0336** Metallic Bronze	**UMB-0493** US Bronze	**EMS-0940** Spanish Gold	**PMB-0808** Performance Gold
PSS-4971 Very Red	**PSS-2876** Orange Glow	**PSS-1791** JuJu Orange	**PSS-0118** Spring Yellow	**PSB-5945** Bright Green	**PMB-10657** Yama Blue
PPB-2846 Purple Glaze	**PSS-1670** Rosette Pink	**PSS-4008** Jewel Grey	**PSS-4500** Crest Grey	**PSS-4647** Beach Tan	**PMB-5478** Montana Gold

SHIMMER/ GLITTER FINISH

PMB-5567 Champagne Shimmer	**UMB-2062** Shimmer Gold	**PMS-5677** Shimmer Copper	**PMB-6611** Shimmer Black	**PPB-8167** Trans Glitter Gold	**PMB-6762** Alloy Glitter

PALLEON METALLIC TEXTURED FINISH

PVB-10274 Palleon Paradise	**PVB-10272** Palleon Fire	**PVB-10271** Palleon Golden Green	**PVB-10268** Dark Palleon Paradise	**PVB-10267** Dark Palleon Golden Green	**PVB-10268** Dark Palleon Fire
PVB-10273 Palleon Panther	**PVB-10269** Dark Palleon Panther				

CHROME/SPECIALTY FINISH

UMS-10671 Super Chrome Plus	**PPB-6677** Black Chrome III	**PMB-4124** Bronze Chrome	**UMB-10813** Rose Chrome	**UMB-10815** Brass Chrome	**UMB-10816** Copper Chrome
PPS-6530 Brassy Gold	**PPB-2262** Anodized Gold	**PPB-8034** Melted Bronze	**PPB-6325** Metallic Clear	**PPB-5633** Tinted Clear	**PPB-5936** Anodized Red

SPARKLE FINISH

PPB-4694 Super Red Sparkle	**PPB-4727** Silver Sparkle	**PPB-5835** Rockstar Sparkle	**PMB-4130** Pearl Sparkle	**PPB-5004** Ultra Blue Sparkle	**PPB-5078** Magnum Blue Sparkle
PMB-2750 Dark Grey Sparkle	**PMB-6769** Deep Blue Sparkle	**PPB-4499** Gold Sparkle	**PMB-4417** Baby Blue Sparkle		

WETSTONE WRINKLED TEXTURE FINISH

PWB-2232 Wetstone Black	**PWB-9157** Wetstone Gold Bronze	**PWB-9156** Wetstone Copper	**PWB-2343** Wetstone Rock Bronze	**PWB-2590** Wetstone Emerald II