SELVA TERRACE

LAYERED LINEAR PENDANT SYSTEM

Selva Terrace combines intersecting linear elements and cascading pendants in four sculptural arrangements. Choose the model on page 2, then select the body-and-lens combination and other options on page 3.

APPLICATION	SB-R206	SB-R416
		
Selva Terrace application	Six-light arrangement	Sixteen-light arrangement

Catalog models, light quantities, wattages, and nominal lumen outputs are shown with the product references on page 2.

FEATURES

5-year limited warranty. Ships fully assembled. Direct illumination.

Standard pendant: 1.26 in body diameter, 8.66 in aluminum body length, and 3.94 in acrylic lens. A 1.57 in body diameter and other component sizes are available.

Select alternate acrylic or bubble acrylic body-and-lens combinations on page 3. Flat lenses, other dimensions, finishes, and suspension configurations are available on request.

Fixtures over 50 lb require installation using a UL Listed outlet box or support independent of the outlet box.

Nominal efficacy: 60 lm/W. Custom configurations: consult the factory.

SPECIFICATIONS

Light quality	Electrical	Finish
CRI 90+ Selectable 3000K/3500K/4000K or 2700K/3500K/4000K; factory setting 4000K. Custom CCT and RGB available.	120-277 VAC, 50/60 Hz 0-10V dimming standard. ELV/Triac available. UL Listed for dry locations.	Aged Brass, Black Jack, Platinum Silver and Gloss White. More than 6,500 custom finishes. See pages 3-4.

Additional pendant styles A-AB and related product links are on page 5. Dimensions vary by style; contact us for details.

ORDERING INFORMATION

Project: _____ Fixture type: _____ Qty: _____

1 Model	2 CCT	3 Control	4 Metal finish	5 Body / lens	6 Cable length
SB-R206A30W	S	(blank)	A	(blank)	(blank)

MODEL NUMBER EXAMPLE: SB-R206A30WSA

1 MODEL - CHOOSE ONE

Select one arrangement. The body-and-lens combination is selected separately under option 5 on page 3.

PRODUCT	MODEL NUMBER	LIGHTS	WATTAGE	NOMINAL LM
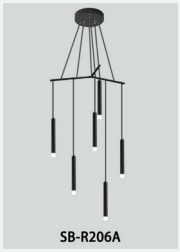	SB-R206A30W	6	30 W	1800 lm
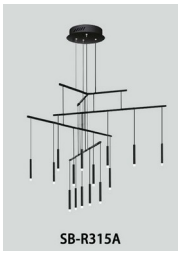	SB-R315A75W	15	75 W	4500 lm
	SB-R416A90W	16	90 W	5400 lm
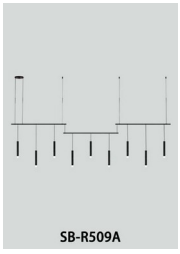	SB-R509A45W	9	45 W	2700 lm

Standard dimensions and fixture weights are on page 6.

After choosing a model, continue with options 2-6 on page 3. Other configurations: request custom pricing.

ORDERING INFORMATION

CONTINUED

Use the model selected on page 2, then choose options 2-6 below.

2 CCT	CHOOSE ONE
S	Selectable 3000K / 3500K / 4000K; factory set to 4000K; CRI 90 (Standard)
A	Selectable 2700K / 3500K / 4000K; factory set to 4000K; CRI 90

Static CCT options: 2700K / 3000K / 3500K / 4000K / 5000K. Consult the factory to specify static or custom CCT.

3 CONTROL	CHOOSE ONE
Blank	0-10V dimming (Standard)
L	ELV/Triac dimming

Input voltage: 120-277 VAC, 50/60 Hz.

CUSTOM COMPONENT SIZE REFERENCES

BODY	ACRYLIC	BUBBLE
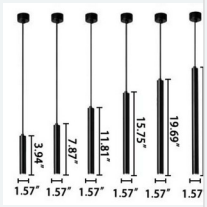	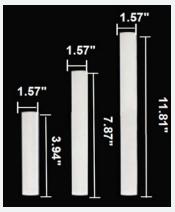	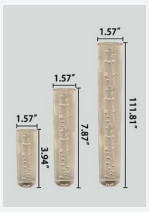

Body lengths: 3.94 / 7.87 / 8.66 / 11.81 / 15.75 / 19.69 / 23.62 in. Lens lengths: 3.94 / 7.87 / 11.81 in.

Standard body diameter: 1.26 in; 1.57 in available. Component illustrations show the 1.57 in option. Catalog drawings show the standard body-and-lens combination.

Other body or lens dimensions and suspension arrangements: request custom pricing.

4 METAL FINISH	CHOOSE ONE
A	Aged Brass / PPB-10674
B	Black Jack / USS-1522
S	Platinum Silver / PMB-8173
W	Gloss White / PSS-5690

Custom finishes: consult the factory. More colors and the website link are on page 4.

5 BODY / LENS	CHOOSE ONE
Blank	8.66 in body + 3.94 in acrylic lens (Standard)
A	11.81 in body + 3.94 in acrylic lens
B	11.81 in body + 3.94 in bubble acrylic lens
C	19.69 in body + 7.87 in acrylic lens
D	19.69 in body + 7.87 in bubble acrylic lens

Flat lens and other component sizes: consult the factory.

6 CABLE LENGTH	OVERALL CABLE LENGTH
Blank	10 ft / 120 in (Standard)
5'	5 ft / 60 in
15'	15 ft / 180 in
20'	20 ft / 240 in
30	30 ft / 360 in

Custom suspension lengths: consult the factory.

Ordering format: [Model][CCT][Control][Metal finish][Body/lens][Cable length].

Blank selections add no characters. The example on page 2 uses CCT S, standard 0-10V control, Aged Brass, and standard 10 ft cable length, with the standard body-and-lens combination.

FINISH OPTIONS

Explore more than 6,500 finishes and colors, including precise color matching, team colors, custom RAL colors, metallic finishes, sparkle finishes, and transparent textures. Contact the factory for pricing and availability.

Request color samples at customerservice@snowball-inc.com. Colors may vary by screen and display settings.

SOLID TONE FINISHES

PMB-4364 Pearl White	**PMB-0593** Soft White	**PSB-8051** Dirty White	**PMB-0513** Silver Metallic II	**PMB-6525** BMW Silver	**HSS-1336** Silk Satin Black
PPS-0106 Ink Black	**USS-2603** Gloss Black	**UMB-0336** Metallic Bronze	**UMB-0493** US Bronze	**EMS-0940** Spanish Gold	**PMB-0808** Performance Gold
PSS-4971 Very Red	**PSS-2876** Orange Glow	**PSS-1791** JuJu Orange	**PSS-0118** Spring Yellow	**PSB-5945** Bright Green	**PMB-10657** Yama Blue
PPB-2846 Purple Glaze	**PSS-1670** Rosette Pink	**PSS-4008** Jewel Grey	**PSS-4500** Crest Grey	**PSS-4647** Beach Tan	**PMB-5478** Montana Gold

SHIMMER AND GLITTER FINISHES

PMB-5567 Champagne Shimmer	**UMB-2062** Shimmer Gold	**PMS-5677** Shimmer Copper	**PMB-6611** Shimmer Black	**PPB-8167** Trans Glitter Gold	**PMB-6762** Alloy Glitter

PALLEON METALLIC TEXTURED FINISHES

PVB-10274 Palleon Paradise	**PVB-10272** Palleon Fire	**PVB-10271** Palleon Golden Green	**PVB-10268** Dark Palleon Paradise	**PVB-10267** Dark Palleon Golden Green	**PVB-10268** Dark Palleon Fire
PVB-10273 Palleon Panther	**PVB-10269** Dark Palleon Panther				

CHROME AND SPECIALTY FINISHES

UMS-10671 Super Chrome Plus	**PPB-6677** Black Chrome III	**PMB-4124** Bronze Chrome	**UMB-10813** Rose Chrome	**UMB-10815** Brass Chrome	**UMB-10816** Copper Chrome
PPS-6530 Brassy Gold	**PPB-2262** Anodized Gold	**PPB-8034** Melted Bronze	**PPB-6325** Metallic Clear	**PPB-5633** Tinted Clear	**PPB-5936** Anodized Red

SPARKLE FINISHES

PPB-4694 Super Red Sparkle	**PPB-4727** Silver Sparkle	**PPB-5835** Rockstar Sparkle	**PMB-4130** Pearl Sparkle	**PPB-5004** Ultra Blue Sparkle	**PPB-5078** Magnum Blue Sparkle
PMB-2750 Dark Grey Sparkle	**PMB-6769** Deep Blue Sparkle	**PPB-4499** Gold Sparkle	**PMB-4417** Baby Blue Sparkle		

WETSTONE WRINKLED TEXTURE FINISHES

PWB-2232 Wetstone Black	**PWB-9157** Wetstone Gold Bronze	**PWB-9156** Wetstone Copper	**PWB-2343** Wetstone Rock Bronze	**PWB-2590** Wetstone Emerald II

EMERGENCY AND STYLE OPTIONS

EMERGENCY BATTERY OPTIONS

PICTURE	MODEL NUMBER	DESCRIPTION
	SB-EBP/5W/B	Factory-installed remote emergency battery pack, 5 W, 90-minute runtime
	SB-EBP/10.7W/B	Factory-installed remote emergency battery pack, 10.7 W, 90-minute runtime
	SB-EBP/17W/B	Factory-installed remote emergency battery pack, 17 W, 90-minute runtime

ADDITIONAL PENDANT STYLES

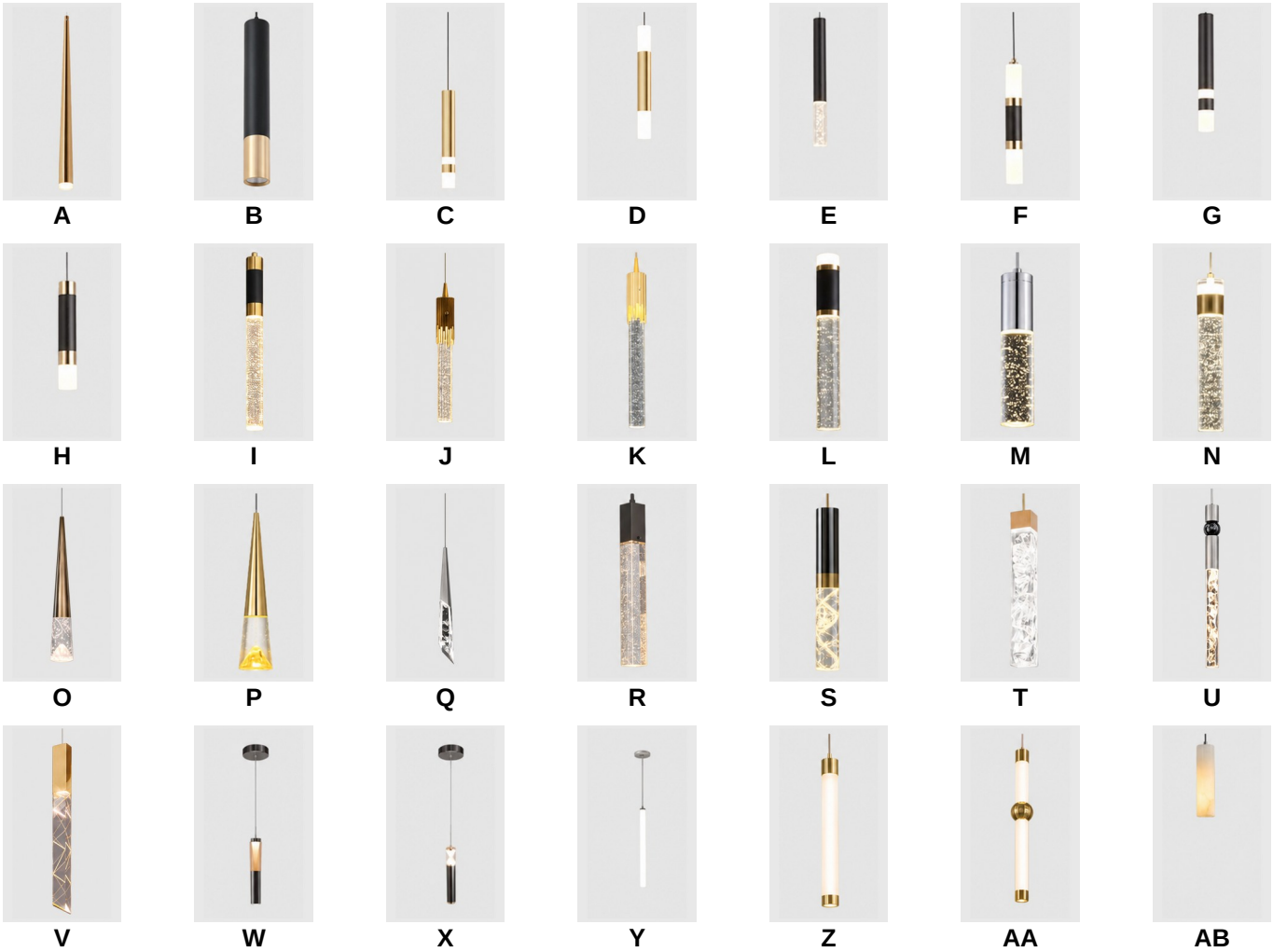

Additional pendant styles are available. Dimensions vary by style. Contact us with the reference letter for dimensions, configurations, and pricing.
For other pendant designs, explore AXIS and Chamonix, or contact us to discuss a custom design.

DIMENSIONS AND WEIGHTS

Dimensions shown in inches. Drawings depict the standard 8.66 in body + 3.94 in acrylic lens combination; alternate components change the pendant dimensions.

SB-R206A30W	SB-R315A75W
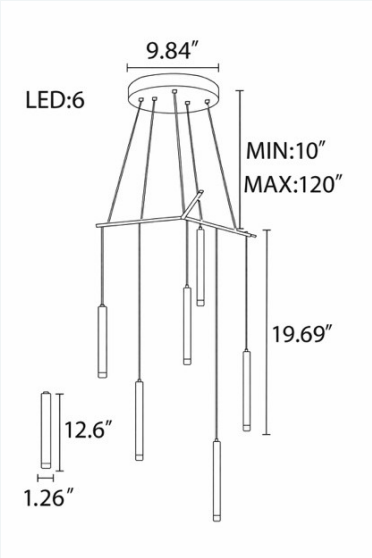	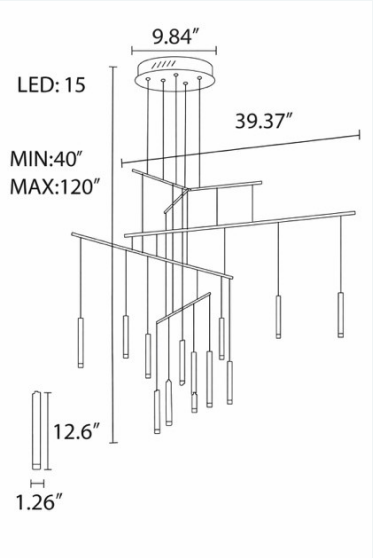
Fixture weight: 5.0 lb	**Fixture weight: 12.0 lb**

SB-R416A90W	SB-R509A45W
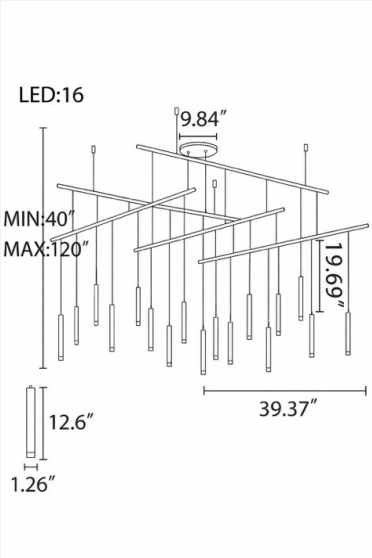	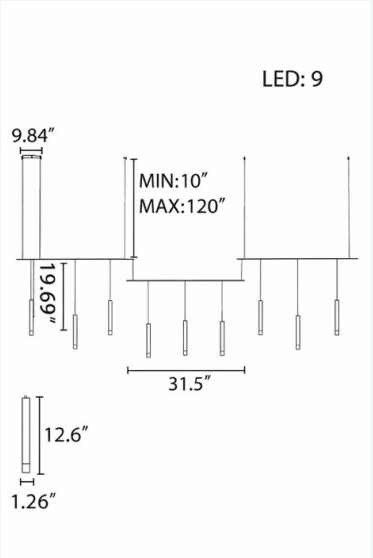
Fixture weight: 14.0 lb	**Fixture weight: 10.0 lb**